PROJECT REFERENCE NO.	SHEET NO.
17.BP.2.R.55	UC-4

UTILITIES ENGINEER

NORTH CAROLINA PROFESSIONAL SEAL 11274 ENGINEER BRYCE EDWARD EATMON, III
DocuSigned by: Bryce Eatmon
11/18/2015

UTILITY CONSTRUCTION DETAILS SHEET

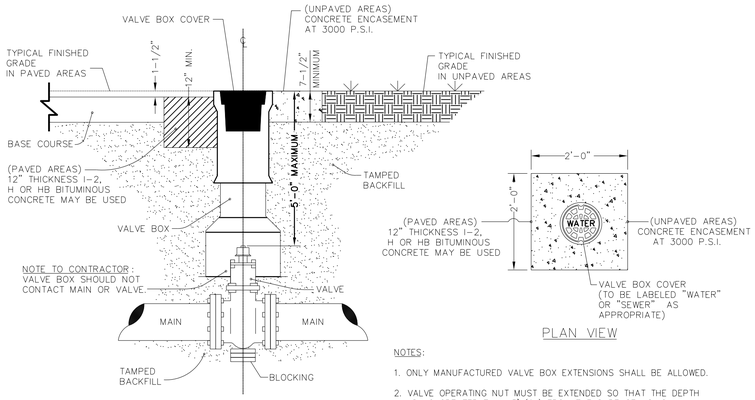

NOTES:

1. ONLY MANUFACTURED VALVE BOX EXTENSIONS SHALL BE ALLOWED.
2. VALVE OPERATING NUT MUST BE EXTENDED SO THAT THE DEPTH IS NO GREATER THAN 5' (ft.) FROM THE SURFACE USING A MANUFACTURER APPROVED EXTENSION KIT.
3. PRECAST CONCRETE ENCASEMENT IS ALLOWED OUTSIDE OF PAVED AREAS.

TYPICAL VALVE BOX

NTS

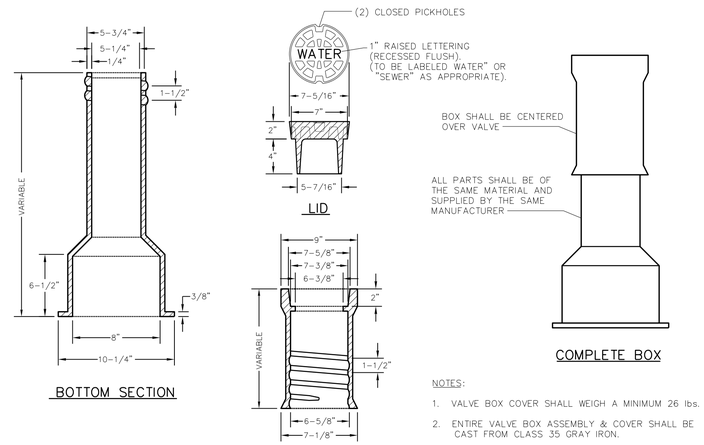

NOTES:

1. VALVE BOX COVER SHALL WEIGH A MINIMUM 26 lbs.
2. ENTIRE VALVE BOX ASSEMBLY & COVER SHALL BE CAST FROM CLASS 35 GRAY IRON.
3. ASSEMBLY SHALL BE DOMESTICALLY MADE AND MANUFACTURED IN THE U.S.A.

TYPICAL VALVE BOX

NTS

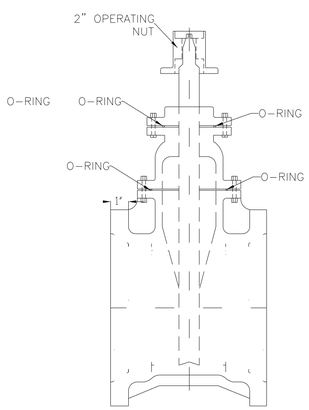

TYPICAL RESILIENT MECHANCIAL JOINT GATE VALVE DETAIL

NTS

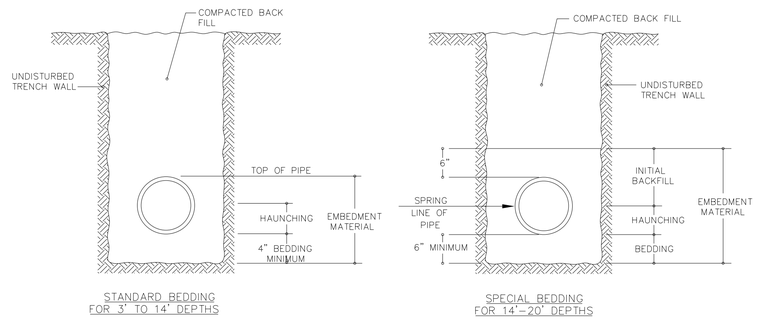

NOTES:

1. EMBEDMENT MATERIAL MUST BE CLASS I (NO. 67 OR NO. 78M WASHED STONE IS TYPICALLY USED).
2. EMBEDMENT MATERIAL SHALL BE COMPACTED TO A MINIMUM 95% STANDARD PROCTOR DENSITY FOR CLASS I MATERIAL.
3. STANDARD BEDDING SHALL BE UTILIZED FOR ALL CASES WHERE TRENCH BOTTOMS ARE UNSTABLE DUE TO SOIL TYPE, OR MOISTURE CONDITIONS.

TYPICAL BEDDING FOR FLEXIBLE & SEMI-RIGID PIPE

NTS

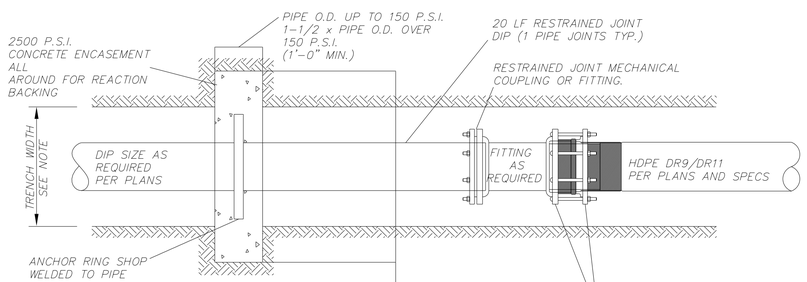

ANCHOR RING DIMENSIONS		
NOMINAL PIPE SIZE	O.D. OF RINGS	THICKNESS
4" – 12"	PIPE O.D. + 6"	1/2"
16" – 24"	PIPE O.D. + 7"	3/4"
30" & 36"	PIPE O.D. + 8"	1"

TYPICAL DIP TO HDPE TRANSITION DETAIL WITH THRUST COLLAR

NTS

8/17/99

23-OCT-2015 08:21
C:\PROJECTS\BEAUFORT\beaufort 119\Beaufortt119_ddc2_psh_uc4.dgn
USER:CHAMPESS