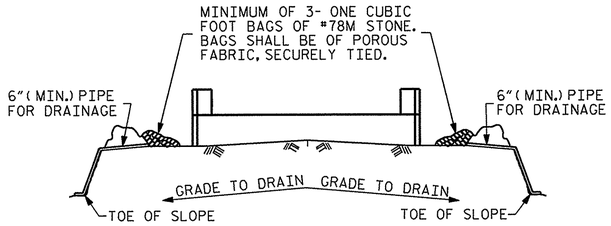

BAGGED STONE AND PIPE SHALL BE PLACED IMMEDIATELY AFTER COMPLETION OF END BENT EXCAVATION. PIPE MAY BE EITHER CONCRETE, CORRUGATED STEEL, CORRUGATED ALUMINUM ALLOY, OR CORRUGATED PLASTIC. PERFORATED PIPE WILL NOT BE ALLOWED.

BAGGED STONE SHALL REMAIN IN PLACE UNTIL THE ENGINEER DIRECTS THAT IT BE REMOVED. THE CONTRACTOR SHALL REMOVE AND DISPOSE OF SILT ACCUMULATIONS AT BAGGED STONE WHEN SO DIRECTED BY THE ENGINEER. BAGS SHALL BE REMOVED AND REPLACED WHENEVER THE ENGINEER DETERMINES THAT THEY HAVE DETERIORATED AND LOST THEIR EFFECTIVENESS.

NO SEPARATE PAYMENT WILL BE MADE FOR THIS WORK AND THE ENTIRE COST OF THIS WORK SHALL BE INCLUDED IN THE UNIT CONTRACT PRICE BID FOR THE SEVERAL PAY ITEMS.

TEMPORARY DRAINAGE AT END BENT

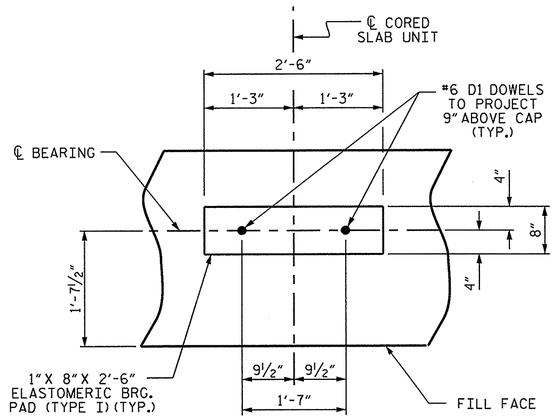

DETAIL "A"

(END BENT 1 SHOWN, END BENT 2 SIMILAR BY ROTATION)

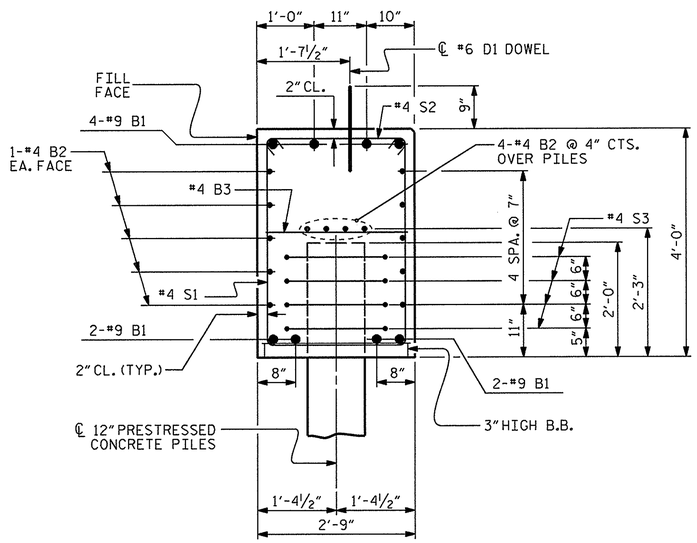

SECTION A-A

BAR TYPES

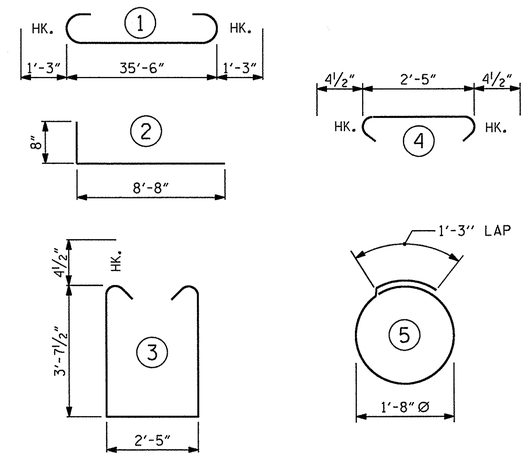

ALL BAR DIMENSIONS ARE OUT TO OUT.

END BENT 1		END BENT 2	
12" PRESTRESSED CONCRETE PILES		12" PRESTRESSED CONCRETE PILES	
NO: 5	LIN. FT.= 275	NO: 5	LIN. FT.= 275
PILE REDRIVES		PILE REDRIVES	
EACH	NO: 5	EACH	NO: 5

BILL OF MATERIAL FOR ONE END BENT

BAR	NO.	SIZE	TYPE	LENGTH	WEIGHT
B1	8	#9	1	38'-0"	1034
B2	28	#4	STR	19'-1"	357
B3	9	#4	STR	2'-5"	15
D1	20	#6	STR	1'-6"	45
H1	40	#4	2	9'-4"	249
K1	16	#4	STR	2'-11"	31
S1	46	#4	3	10'-5"	320
S2	46	#4	4	3'-2"	97
S3	20	#4	5	6'-6"	87
V1	52	#4	STR	6'-2"	214
REINFORCING STEEL (FOR ONE END BENT)					2449 LBS.

CLASS A CONCRETE BREAKDOWN (FOR ONE END BENT)

POUR #1	CAP & LOWER PART OF WINGS	▲ 16.7 C.Y.
POUR #2	UPPER PART OF WINGS	2.1 C.Y.
TOTAL CLASS A CONCRETE		18.8 C.Y.

▲ CONCRETE DISPLACED BY THE 12" PRESTRESSED CONCRETE PILES HAS BEEN DEDUCTED FROM THE CONCRETE QUANTITY.

PROJECT NO. 17BP.2.R.55
BEAUFORT COUNTY
STATION: 12+58.00 -L-

SHEET 4 OF 4

STATE OF NORTH CAROLINA
DEPARTMENT OF TRANSPORTATION
RALEIGH

SUBSTRUCTURE

END BENT 1 & 2 DETAILS

NORTH CAROLINA PROFESSIONAL SEAL 22005 ENGINEER A. KEITH PASCHAL
9.19.14

REVISIONS						SHEET NO.
NO.	BY:	DATE:	NO.	BY:	DATE:	S-12
1			3			TOTAL SHEETS
2			4			14

ASSEMBLED BY : D. G. ELY	DATE : 7/8/14
CHECKED BY : A. K. PATEL	DATE : 7/14
DRAWN BY : WJH 12/11	
CHECKED BY : AAC 12/11	

19-SEP-2014 08:44
S:\DPG1\Division2\17BP.2.R.55\Final Plans\17BP.2.R.55_SD_Complete_CS.dgn
kpaschal

STD. NO. EB_30_90S4