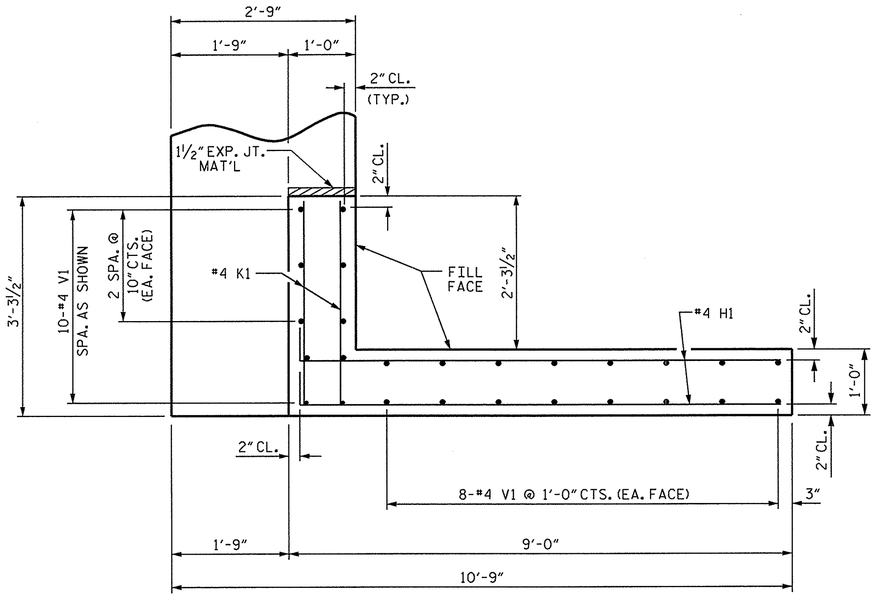


PLAN OF WING (W1)

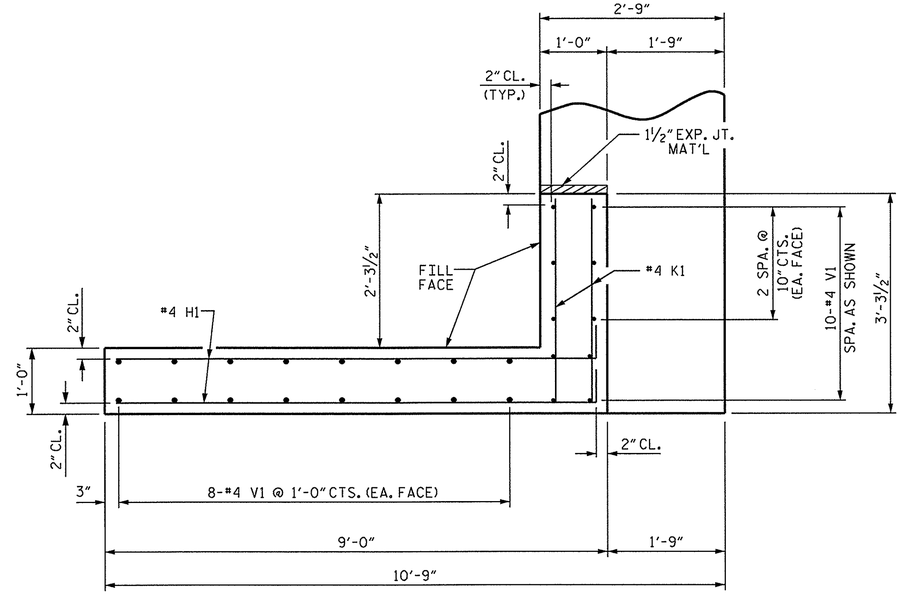


PLAN OF WING (W2)

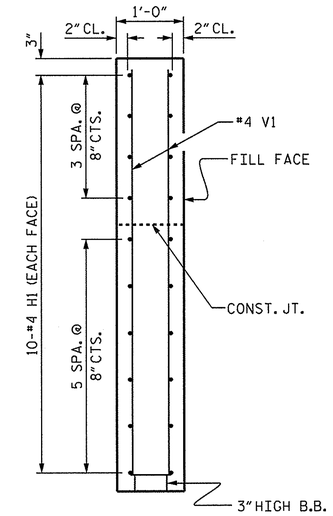


SECTION X-X

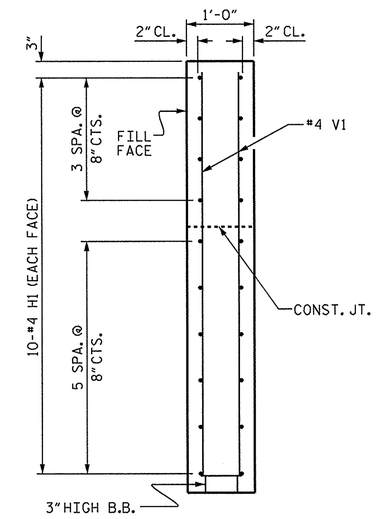


SECTION Y-Y

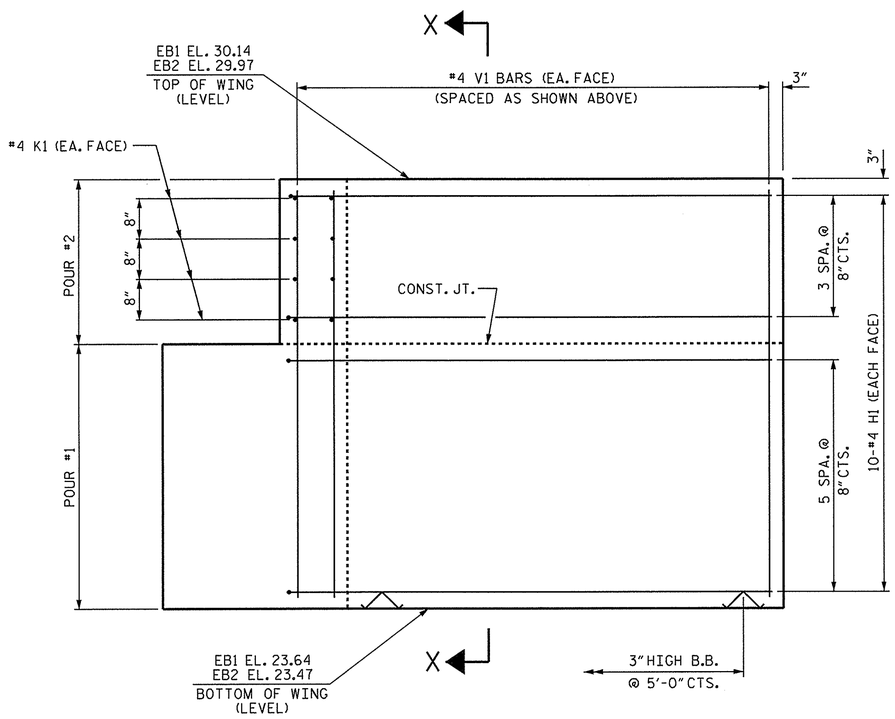


ELEVATION OF WING (W1)

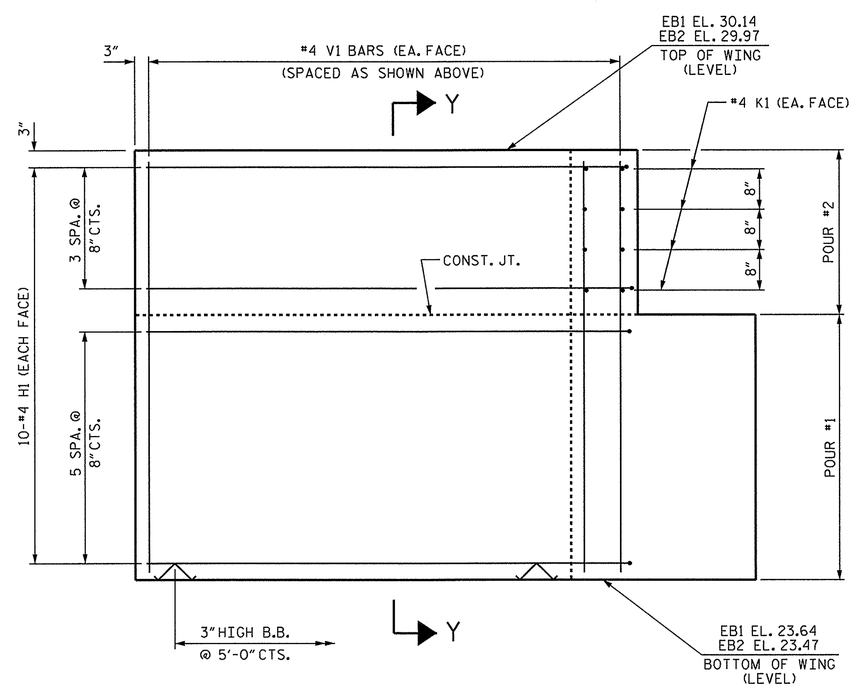


ELEVATION OF WING (W2)

WING DETAILS

PROJECT NO. 17BP.2.R.55
BEAUFORT COUNTY
STATION: 12+58.00 -L-

SHEET 3 OF 4

STATE OF NORTH CAROLINA
DEPARTMENT OF TRANSPORTATION
RALEIGH

SUBSTRUCTURE
END BENT
WING DETAILS

NORTH CAROLINA PROFESSIONAL SEAL 025 ENGINEER K. KEITH PASCHAL
9.19.14

| REVISIONS | | | | | | | | SHEET NO. |
|---|---|---|---|---|---|---|---|---|
| NO. | BY: | DATE: | NO. | BY: | DATE: | | | S-11 |
| 1 | | | 3 | | | | | TOTAL SHEETS |
| 2 | | | 4 | | | | | 14 |

| | | |
|---|---|---|
| ASSEMBLED BY : W. DEBREW | DATE : 5/14 | |
| CHECKED BY : S. STRICKLAND | DATE : 5/14 | |
| DRAWN BY : WJH | 12/11 | |
| CHECKED BY : AAC | 12/11 | |

19-SEP-2014 08:44
S:\DPGI\Division2\17BP.2.R.55\Final Plans\17BP.2.R.55_SD_Complete_CS.dgn
kpaschal

STD. NO. EB_30_90S4