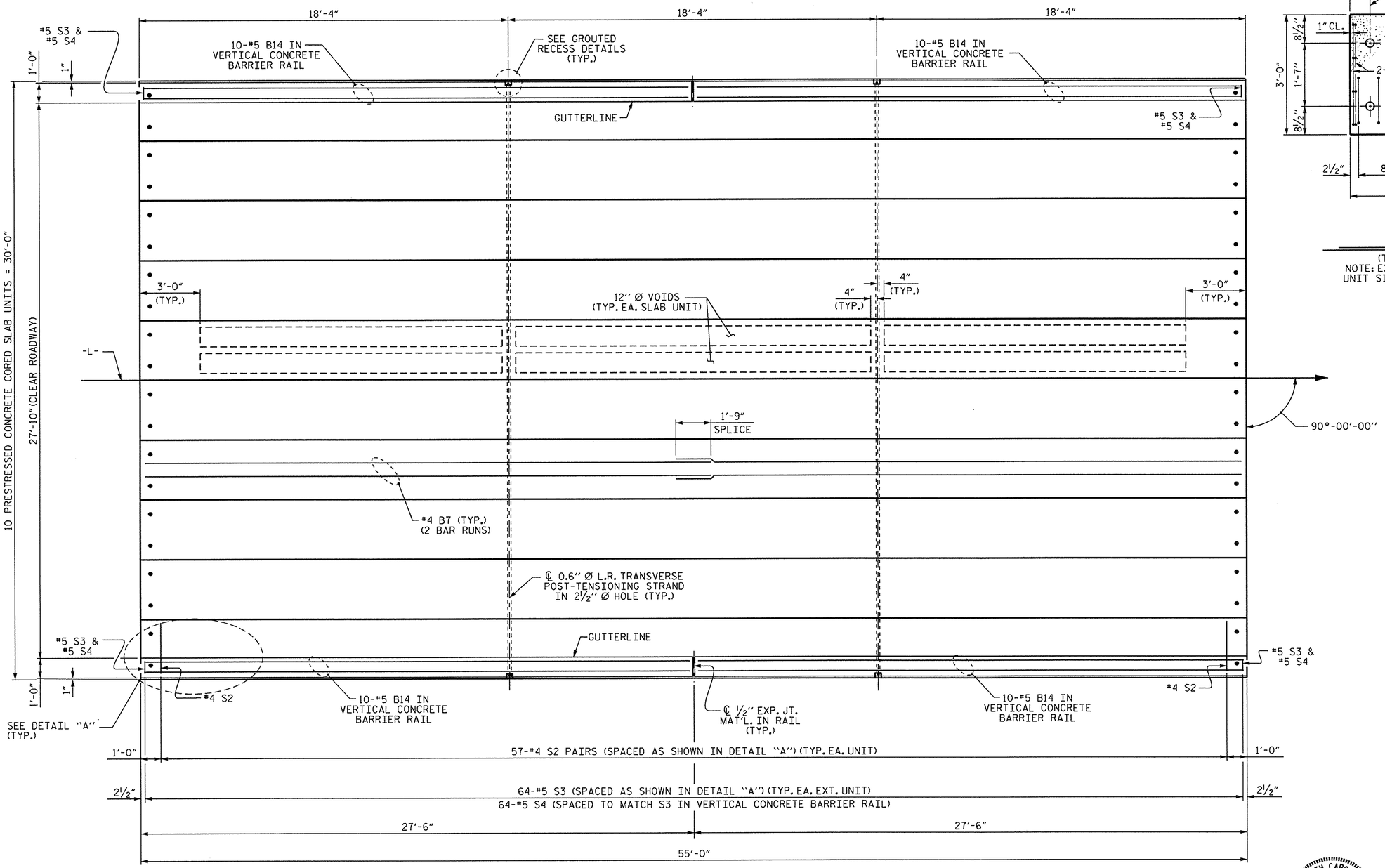

PLAN OF UNIT

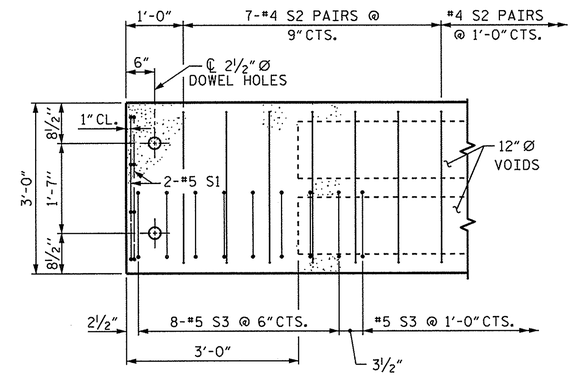

DETAIL "A"

(TYPICAL EACH END OF UNIT)
NOTE: EXTERIOR UNIT SHOWN - INTERIOR UNIT SIMILAR EXCEPT OMIT #5 S3 BARS.

PROJECT NO. 17BP.2.R.55
BEAUFORT COUNTY
STATION: 12+58.00 -L-

SHEET 2 OF 3

STATE OF NORTH CAROLINA
DEPARTMENT OF TRANSPORTATION
RALEIGH

PLAN OF 55' UNIT
27'-10" CLEAR ROADWAY
90° SKEW

NORTH CAROLINA PROFESSIONAL SEAL 22005 ENGINEER KEITH PASCHAL
9-19-14

ASSEMBLED BY : W. DEBREW		DATE : 5/14	
CHECKED BY : S. STRICKLAND		DATE : 5/14	
DRAWN BY : DGE 3/09	REV. 12/5/11	MAA/AAC	
CHECKED BY : BCH 3/09	REV. 8/14	MAA/TMG	

REVISIONS						SHEET NO.
NO.	BY:	DATE:	NO.	BY:	DATE:	S-6
1			3			TOTAL SHEETS
2			4			14

19-SEP-2014 08:44
S:\DPG1\Division2\17BP.2.R.55\Final Plans\17BP.2.R.55_SD_Complete_CS.dgn
kpaschal

STD. NO. 21" PCS_30_90S_55L